ROBAM



User Manual

Before operating this unit, please read the user manual completely and keep it. If the manual is lost, you can send e-mail to overseas@robam.com, request for an electronic manual.

CXW-260-A675S

Range Hood

Product Description

Technical Data

Model	CXW-260-A675S	Noise	50dB(A)
Power Supply	220-240V~ 50-60Hz	Rated Power Input	262W
Total Pressure Efficiency	≥30%	Rated Main Motor Power Input	260W
Nominal Wind Pressure	500Pa	Lamp Power(max)	≤2W
Airflow	1140m³/h	Dimension (L×W×H)	(895×410×668)mm
Max static pressure	1000Pa	Net Weight	29.8kg
Normal Odour Reduction Factor	≥98%	Grease Absorption Factor	≥92%

Note：

1. The performance test results are all in 230V~ 50Hz power supply environment. The airflow in according to IEC61591, the noise in according to IEC60704.
2. The tolerance between listed of airflow, nominal wind pressure,max static pressure and actual data should be less than 10%.
3. The noise declared value shown is A weighted sound pressure level.
4. When turbo funcition is enabled, the airflow is 1500m³/h.

Body Size

The marked sizes are for reference only, the depth dimension includes machine feet. (Unit：mm)

Note: The size inside the cabinet should be larger than the size with *. 326mm is the depth dimension excluding the main panel, and 331mm is the depth after matching the main panel.

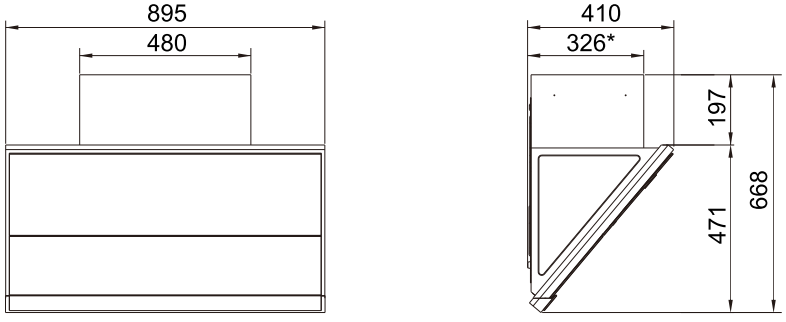

Packing List

Please check the contents of the box after unpacking

	No.	Name	Quantity	No.	Name	Quantity
装箱单	1	Range hood	1	8	ST4.2×18 self-tapping screw	6
	2	Ø185(outer diameter) aluminum exhaust pipe	1	9	ST4.2×8 self-tapping screw	6
	3	Exhaust pipe fixed strip		10	4×60 wood screw	4
	4	Exhaust pipe tape		11	M6 metal expansion pipe	1
	5	Exhaust pipe connection		12	Hitching foot stopper	1
	6	User manual	1	13	Hitching foot	1
	7	Check valve	1	14	Plastic expansion pipe	4

Installation

⚠ If the flue aperture is less than air duct aperture, it will influence the fume suction effect and the too long air duct will influence the fume suction effect, too.

Preparation for installation

●Surrounding

Keep the hood away from too many doors and windows, so as to avoid air convection affecting the efficiency.

●Tools preparation

The hood will be installed with the following tools

1.an impact drill (with drill bit)；2.a wrench；3.a screwdriver; 4.a ruler.

Notice

● Installation and circuit setting must be done by experienced professionals. Only a professionally trained person with an installation qualification can install the hood. Non-professionals are not allowed to install, dismantle and repair the hood.

●Please do not power on the hood before installation to avoid electric shock.

● Do not expose the hood if your kitchen is under renovation, because construction materials, dusts, paint, coatings, and emitted gases will corrode and tarnish the hood surface. Therefore, it is recommended to install it after the renovation is completed.

●If you need move the Gas Hob before installing the Range Hood, please close the main valve before moving the Gas Hob.

● Don't install the hood on wood and other combustible walls. The wall shall be made of noncombustible materials with enough strength and the surface shall be flat.

●The hood may have very sharp edges. So, please wear protective gloves during hood installation, cleaning or repair.

●When drilling on the wall or ceiling board, keep away from embedded wires and other concealed devices to avoid electric shock and fire.

● Do not install the hood at a too high position as well as keep the hood free from disturbance of ambient airflow lest the reduction of smoke pumping effect shall occur.

●When making cabinet, please leave space for installation and disassembly of the hood in order to maintain and overhaul the hood.

●When installing, please keep the machine body remain horizontal.

●Please use single phase grounded socket and the hood shall be well grounded (water pipe grounding is not reliable and gas pipeline grounding has risks of causing fire disaster and explosion).

● In order to ensure safety and successful installation, please use standard accessories provided with the hood for installation, otherwise the hood may be at risk of falling down.

● If the power cord is damaged, in order to avoid danger, it must be replaced by manufacturer, professionals of its maintenance department or similar departments. Please do not carry out restructuring, stretching, knotting and squeezing or apply heavy objects to the power cord, etc., otherwise it may cause power cord damage easily, leading to accidents such as electric shock and fire disaster, etc.

●After installation, please clean the surface of the hood, and then supply power for test run.

Installation

Note: All data units in the following diagram are expressed in mm.

●Determine the position: the reserved size of the cabinet is shown in Fig. 1, the drilling size of the suspended ceiling is shown in Fig. 2, and the socket position is recommended to be installed above the suspended ceiling.

Figure 1

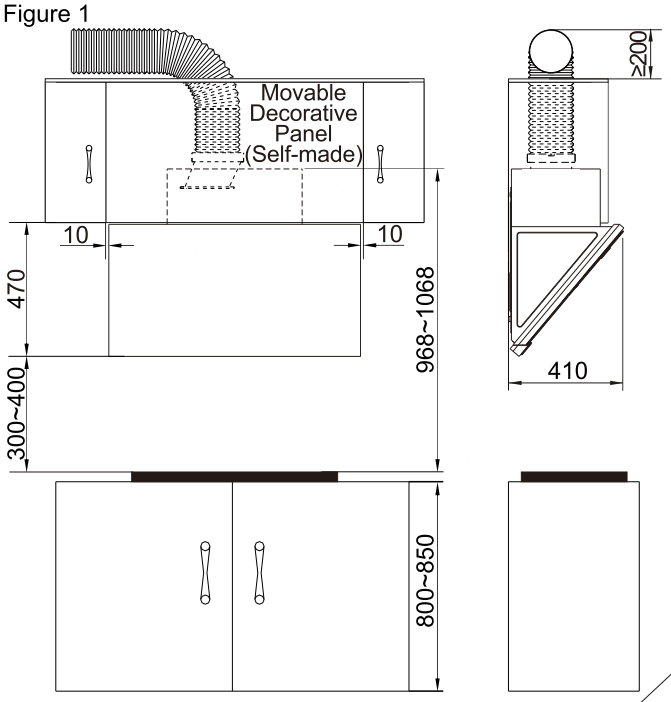

Cabinet dimension is for reference only

Figure 2

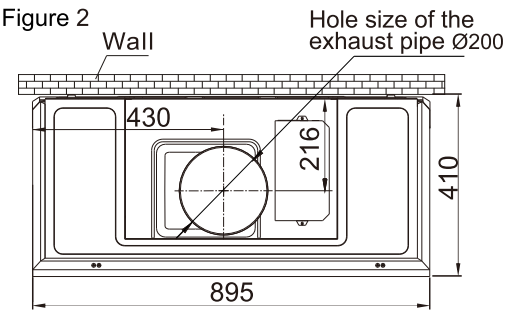

Ceiling hole sizes(Projection size of the hood top)

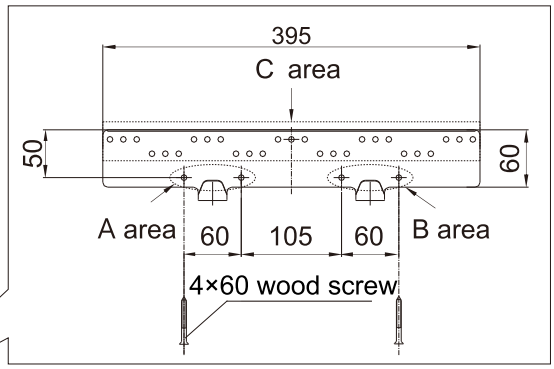

Figure 3

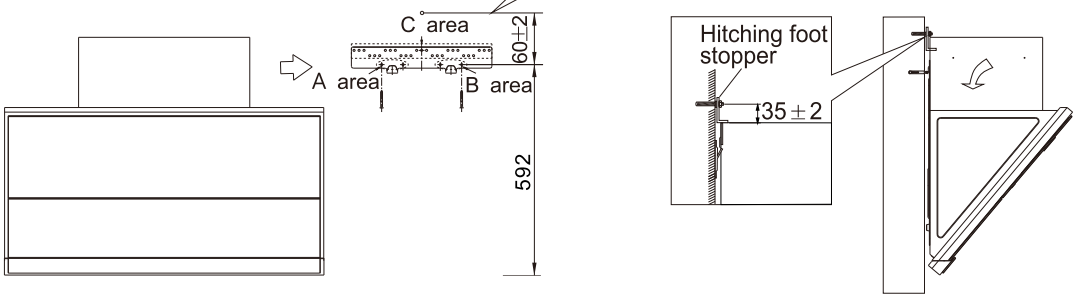

●**Install hitching feet:** According to the size of the hitching feet, drill four 60mm-70mm-deep holes on the wall accordingly with an 10mm-diameter drill bit (overlarge holes are prohibited). Press the expansion pipe into the holes, and then fix the hitching feet with 4 accompanying 4×60mm wood screws. Drill a hole with diameter of 10mm and depth of 50mm-55mm at the position 60mm above the four holes and insert the M6 metal expansion pipe into the hole. (Figure 3)

Note:1. Area A and B on the drawing must be fixed with screws respectively (at least one for each area);

2. If it is a wooden house, one screw (at least one) must be fixed at the corresponding wooden column in Area C.

●**Install the hood body**

Fix the check valve as shown in Figure 5. Then align the hanging holes in the back of hood with the hooks of hitching feet according to Figure 3, and press them together. Shake the body to check if it's hung securely. After the body is mounted, install the hitching foot stopper and gaskets to the M6 metal expansion pipe, and then tighten the nuts (to prevent accidental decoupling of the body under external force).

Install the aluminum exhaust pipe

●Drilling position of the aluminum exhaust pipe (public flues do not require drilling)

a.Aluminum exhaust pipe and hob facing the window: Remove one of the glasses and install a plywood with ventilation holes or punch directly on the glass.

b.Hob away from the window: Install the aluminum exhaust pipe through the window that is close to the hob and connected outside; or install it by punching on the wall that is close to the hob and connected outside.

c.Drill hole through the wall: Determine the location of the aluminum exhaust pipe against the wall and draw the drilling range (i.e. a circle slightly larger than the pipe OD). Then use a long drill bit to drill through the wall. Pay attention to the wall structure and material, so as not to destroy other parts of the wall.

●Link the aluminum exhaust pipe

Insert the end of aluminum exhaust pipe without fixed strip to the pipe connection and stick with tapes, then straighten the aluminum exhaust pipe and connect it to the public flue outlet (If there is no public flue, please straighten the aluminum exhaust pipe to the outdoors). This can be done directly when the public flue outlet or wall hole is larger than the aluminum exhaust pipe. Otherwise, there are five types of pipe small ends (OD:140,150,160,170 and 180 respectively) to be chosen from according to the hole size. Then cut the excess part smaller than public flue outlet or wall hole with scissors.

Then insert the end of the aluminum exhaust pipe with fixed strip in the outer ring of the check valve connection and seal with exhaust pipe tapes. At last, put four snaps of the check valve connection in corresponding slots, and rotate them clockwise to fix the exhaust pipe to the check valve.

Figure 4

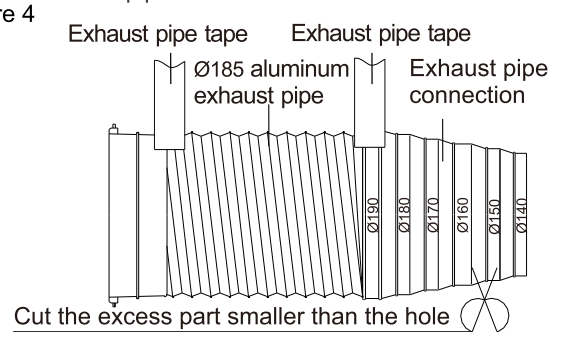

Note: During installation, straighten the aluminum exhaust pipe to avoid noises in semi-stretched state.Excess part may be cut with a wire cutter.

Figure 5

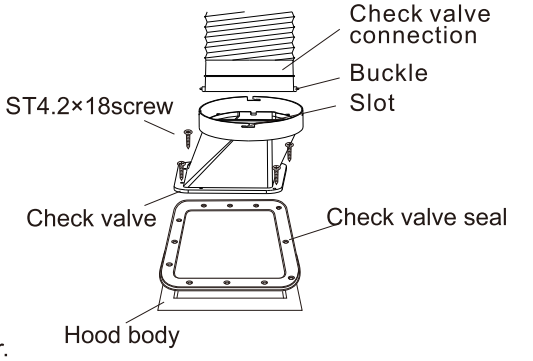

The exhaust wall hole diameter shall be close to that of the exhaust pipe, which shall not be too small. Otherwise, it will cause poor exhaust efficiency, more noises and lower volume, etc. The connection between the pipe and the hole or the public flue must be sealed tightly to ensurethat, the pipe and the check valve or public flue is connected securely. The blades at the check valve connection or public flue connection must be flexible.

User Manual

Switch control panel

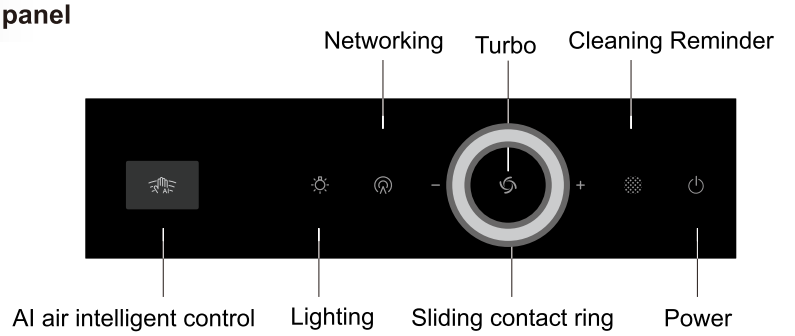

When the power supply is turned on, the buzzer sounds, all the indicator lights are on and go out after a few seconds, indicating that the power is on.

 Power	Press the power key to enter the power-on state, and the icon of the power key is on. 1. If the fan is working when the power is turned on, press the power button, the icon of the power button will flash, and the hood will enter the delayed working state, and the hood will be turned off after 1 minute. When the power button flashes, press the power button again to turn off the hood directly. 2. In the power-on state, if no function runs within 3 minutes, it will automatically shut down.
 Sliding contact ring	1. Slide clockwise or click on the right half of the ring to adjust the large air volume, up to the stir-frying gear; 2. Slide counterclockwise or click on the left half of the ring to adjust the air volume to the minimum of closing; 3. Ring display: The whole circle of blue breathing is displayed when the air volume is stir-fried; The whole circle of blue is displayed when the air volume is strong; When the air volume is weak, the whole circle is white.
 Turbo	1. Press the stir-fry button, the stir-fry icon is always on, the ring blue is all on, and the breathing effect is displayed, thus entering the stir-fry state. After 3 minutes, it automatically switches to the strong gear, the ring stops breathing, changes to blue and lights up, and the stir-fry icon goes out; 2. Press this button again in the stir-fry state, the icon and ring will go out, and the fan will stop working.
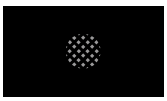 Cleaning Reminder	1. When the hood runs for 60 hours, the cleaning reminder icon flashes to remind the user to clean the oil net; 2. Press and hold the cleaning reminder button for a long time, and the icon is always on, and enter the cleaning mode (the fan stops, the lighting lamp and the air deflector are turned on, and the other buttons are invalid except the cleaning reminder button and the lighting button); 3. The user must clean the oil net by himself. After cleaning, press this button for a long time, the cleaning reminder icon goes out, the cleaning mode is exited, and the accumulated time is cleared.
 Lighting	Turn on or off the lighting lamp according to the open key. When turned on or off, the lighting lamp is gradually turned on or off.
 AI air intelligent control	1. Suspending in front of the sensing area can control the turning on and off of the machine and switch the lights synchronously, waving from left to right to control the big air volume stir-fry and strong gear switch, and waving from right to left to control the small air volume weak gear and close switch; 2. In the shutdown state, press the stir-fry button and cleaning reminder button for a long time to turn off or turn on the sensing function, and press the stir-fry button and lighting button for a long time to turn off or turn on the automatic lighting function for gesture startup.
 Networking	1. When the power key is on, press the networking key for a long time to enter the networking configuration state. The networking icon flashes. After networking is successful, the icon lights up for a long time. If the network is not successfully connected for 3 minutes, the icon will stop flashing and go out. 2. When the networking is successful and the network is normal, the networking icon will be on for a long time when the network is turned on, and the icon will go out when the network is turned off.

Maintenance

Notice

●The hood shall be cleaned and maintained regularly depending on the surroundings, so as to keep its cleanness & efficiency and extend its service life.

We recommend that: Clean the outer surface of range hood after each cooking.

To ensure smooth discharge of fumes, the protective screening shall be cleaned regularly according to actual situations. Be careful to avoid damage when cleaning.

●It is recommended to use a neutral detergent to clean instead of strong detergents, and dry with a soft cloth. If your range hood is a mechanical switch, you should also avoid detergent touching each control key.

●Do not allow stains to stay on the surface of the hood for too long.

●Please do not use cleaning balls, brushes and other rough objects to clean the hood to prevent the body surface from scratching.

●When cleaning or maintaining the hood, please wear protective gloves to prevent wounding during wiping.

●Please regularly check and clean the oil cup. As shown in the right figure, hold the oil cup with both hands, pull it out and pour out the waste oil.



●The range hood shall be started before cooking.

●Please unplug it during long-term shutdown, but please do not pull hard.

Removal of Components

Note: The installation procedures of the following components are in reverse with the removal. Please wear protective gloves during operation to prevent the sharp edge of metal hurting your hands.

⚠ Unplug before installing or disassembling, avoiding from electric shock.

Romoval of lamp

●Long press the cleaning reminder button to open the air deflector, and then unplug the power plug. Insert a flat screwdriver into the gap between the lamp and the air deflector, and pry out the lamp for maintenance and replacement.

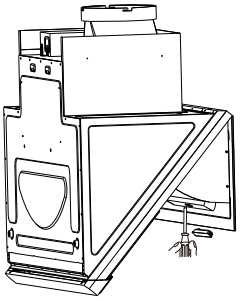

Lamp image	Lamp information	
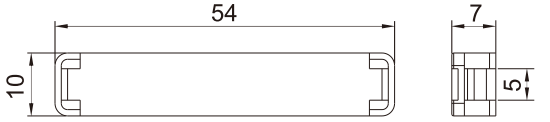	Lamp Type	Rectangular LED
	Max Power	2W
	Voltage	12VDC
	Dimension	See the lamp image

Romoval of switch

●Press the cleaning reminder key for a long time to open the air deflector, and then pull off the power plug.
●Unscrew two screws on the noise reduction plate with a screwdriver, and take out the noise reduction plate and the noise reduction cotton. After unscrewing a screw in the middle of the cover plate, take out the switch combination and unplug the connecting wire, and then repair and replace it.

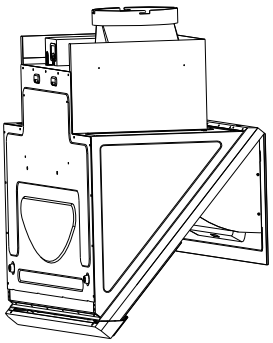

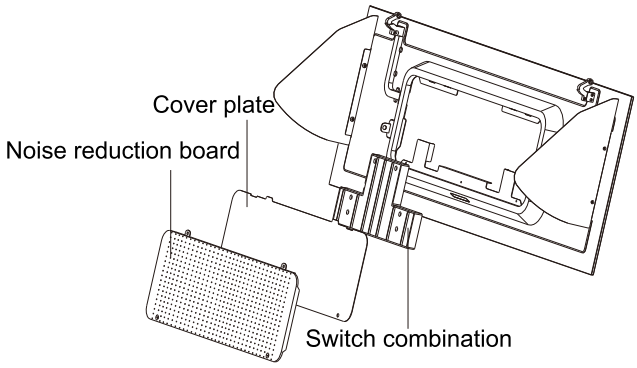

Romoval of filter

●Press the cleaning reminder key for a long time to open the air deflector.
●Hold the two magnetic clasps on the filter screen with both hands, apply a little force outwards so that the filter screen can no longer be sucked, then lift the filter screen in the direction of arrow to make it out of the clamping groove, and finally draw out the filter screen outwards to clean the filter screen.

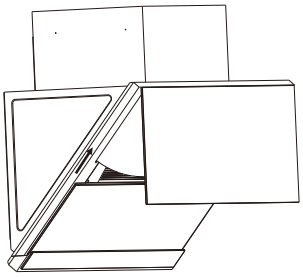

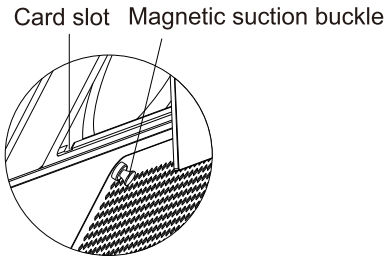

Romoval the whole range hood

1. After the air deflector is powered on and closed, unplug the power plug.
2. Unscrew the screws on the rear plate, remove the rear plate, unscrew 6 screws at the air outlet of the air duct, and take out the air duct combination;
3. Unscrew the 4 screws on the retaining ring, then unscrew the cap clockwise and take out the impeller vertically;
4. Remove the lamp according to the "lamp disassembly" step;
5. Remove the switch combination according to the "switch disassembly" step;
6. Remove the filter screen according to the "filter screen disassembly" step;

The installation procedure is the reverse of the removal procedure.
(When installing the impeller, please apply some lubricating oil to the shaft hole of the impeller.)

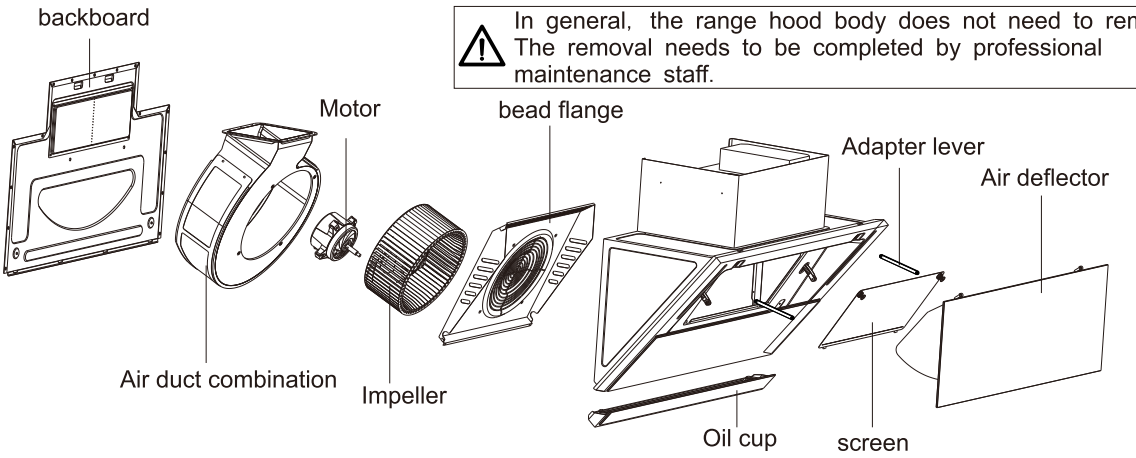

In general, the range hood body does not need to remove. The removal needs to be completed by professional maintenance staff.

Circuit Diagram

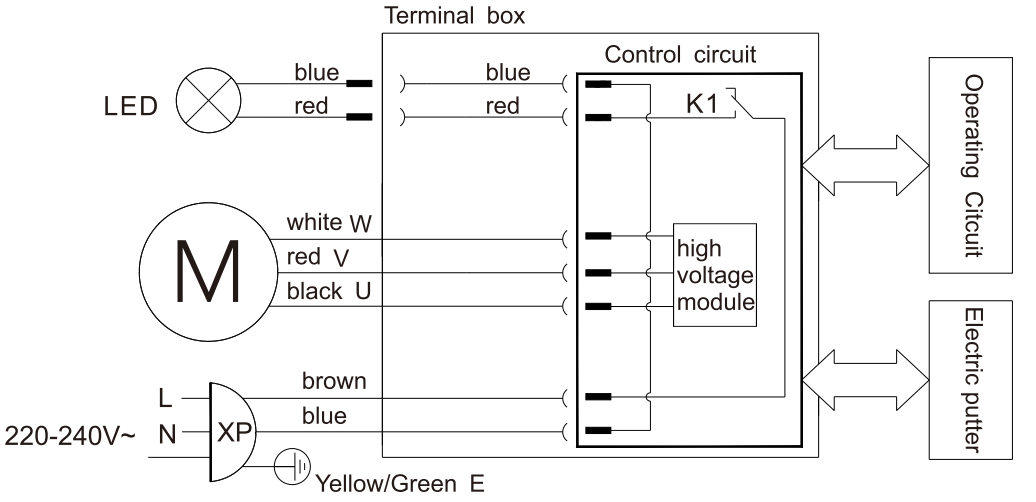

Troubleshooting of General faults

Fault	Cause	Solution	Warning
No response after pressing any icon (e. g. the impeller does not rotate, or the light is off)	The power plug is not connected properly or there is power failure	Plug in the power plug	When connecting or replacing the plug, please unplug the power plug.
Pressing the lighting icon, the headlamp is not lit	The light is damaged or poorly connected	Replace the light or plug in the plug	
Induced current exists on the hood body may paralyze hands	The power socket is not grounded well	Use single-phase three-pole socket and well grounded	
Abnormal sound during impeller running	The impeller is loose, and the cap is not tightened	Tighten the cap	
No oil in the oil cup after a period of time	The hood body is tilt	Adjust the body to the horizontal state	
After pressing the airflow key and during the opening of the smoke deflector, there are some beeps or the smoke deflector cannot open at al.	The driving circuit of the electronic push rod or the push rod itself malfunctions, or the wire of the push rod is in poor contact.	Contact professional maintenance personnel	

Edition: A/1
Publication Date: Feburary, 1, 2021

ROBAM